thecarversite.com

This manual is either an original scan from tech's who worked at Carver corp, donated by forum members, or both. These manuals are NOT intended for re-sale. If you purchased a 'Carver Manuals' disc on ebay or another auction site, and it has this material on it, you were ripped off!

Please report any resale of this material to us at thecarversite.com

thecarversite.com

Introduction

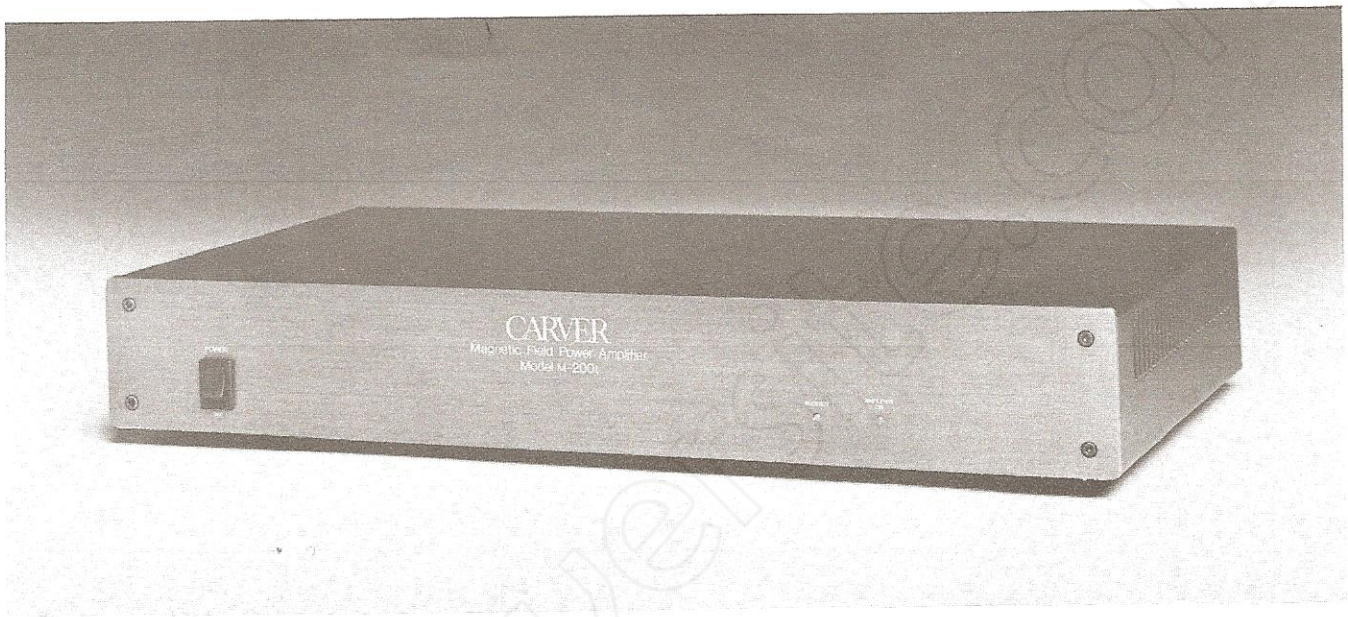

Congratulations on purchasing a Carver M-200t Magnetic-Field Power Amplifier™. Your amplifier has been designed and built to be a superior performer in every respect. Compared to conventional amplifier standards, the M-200t is second to none; its sound quality is smooth, clean and absolutely accurate.

When it comes to output power, the M-200t can deliver more than 120W rms per channel into an 8Ω loudspeaker or 350W into a single mono loudspeaker. It can deliver this awesome power from 20 kHz all the way down to 1 Hz with an absolute minimum of noise and distortion. The closed-loop frequency response extends from below 1 Hz to over 80 kHz. But there's more to this than great sound and excellent specifications.

The M-200t takes full advantage of Bob Carver's proven Magnetic-Field Amplifier technology. One obvious benefit is your amplifier's compact weight and size. Conventional amplifiers capable of putting out as much power as the M-200t can weigh three to four times as much. The magnetic-field technology that makes this possible yields even more advantages that go far beyond the scope of weight and size.

Another benefit of magnetic-field technology is operating efficiency. The M-200t's power supply can momentarily "assign" unused power from one channel to the other by as much as 30W when required by the dynamics of music (with one channel driven). Plus, the M-200t can operate safely into 4Ω without requiring fan cooling.

In addition to efficiency and performance, the M-200t provides protection for your loudspeakers from possible damage caused by sustained overloads, clipping, or temporary nonmusical transients. The M-200t employs special analog-comparator circuits to sense conditions that could cause trouble on a moment-to-moment basis. If the circuits detect conditions that could cause thermal loudspeaker failure, the amplifier will shut down. These same circuits can also distinguish between powerful low-frequency music passages and potentially damaging low-frequency fault signals such as a dropped tonearm or pulled input cable. Yet, the M-200t affords this protection without compromising the full dynamics and impact of your favorite music.

Warranty Card

It's highly unlikely your M-200t will ever need service but, should the unlikely occur, the Warranty Card is *the* ticket to Carver's three-year limited

Here are some suggested do's and don'ts that will make setting-up and using the M-200t a safe, as well as enjoyable, experience:

- Don't operate the M-200t on any ac line voltage than that specified on the rear panel.
- Make all connections to and from your M-200t with its power, and power for all other components in your system, switched off.
- When unplugging the ac line cord, grasp the plug and pull; don't yank on the cord itself.
- If someone accidentally spills a drink on the M-200t's chassis, unplug the amplifier and have it checked or cleaned by a qualified service technician. This applies to every piece of equipment in your stereo system.
- Of course, we've mentioned that there aren't any user-serviceable parts inside your M-200t. Please, resist any temptation to fiddle around inside its chassis. Avoid electrical shock and/or extreme embarrassment; refer all service work to a qualified technician.

Again, keep the carton and packing materials the M-200t came in. Should you move, the best shipping container is the original carton. Hang on to this owner's manual, too. When your music system gets to its new home, the safety, installation and operating instructions could be more than useful. Remember to fill out and return the Warranty Card. In the remote possibility your amplifier needs service, the Warranty Card is a passport to speedy repairs from either a local Authorized Carver Service Center or the factory.

Installation

Actual installation of the M-200t is a relatively simple procedure. The first step is locating the amplifier on a smooth surface where it's protected from excessive heat, direct sunlight, or moisture. When selecting a location for the M-200t, care should be exercised not to place it too close to other highly sensitive stereo components.

Under normal conditions, the M-200t operates with cool efficiency having huge reserves for voltage and power-dynamic headroom. Even though your amplifier is extremely efficient, it will still generate some heat when called upon to produce high levels of output power. It also heats up and cools down more rapidly than conventional amplifiers. A shorter thermal-time constant results from the reduced mass of the M-200t — about one-third that of conventional amplifiers. This is because there's less material bulk to absorb and build internal heat. Under sustained high-power operation, it's normal for the small chassis to dissipate internally-generated heat and may be quite warm to the touch. It won't harm any internal electrical components as they're rated for safe operation under far more extreme temperature ranges than encountered in the M-200t.

Still, enough room must be provided for proper ventilation around and beneath the M-200t. This allows air to enter from the bottom and exit out its top, back, and sides. Avoid placing your amplifier on a shag or deep-pile carpet as this could impede air flow.

Appearance Panel

If you wish to match the M-200t's front panel with 19 inch-wide stereo components, the optional Appearance Panel (Carver PN# C-HE/M-200) should be installed at this time. Information on attaching this panel comes with its packing kit, or consult your Carver dealer.

Cleaning

It's a good idea to wipe the M-200t's chassis from time-to-time with a soft, dry cloth. If you have to get something stubborn off, use a mild dish soap or detergent sparingly applied to a soft cloth; don't use alcohol, ammonia, or other strong solvents.

Power

Your M-200t is designed to be connected to either a switched or unswitched convenience receptacle on a preamp. You may switch the amplifier on and off by using its own front panel-mounted switch or the preamp's power switch. Any convenience receptacle used to power the M-200t should be rated at no less than 500W. If convenience receptacles on the preamp are taken up by other components, a multireceptacle power bar should be

used. Just plug all additional stereo components and the M-200t into the power bar (including the preamp). Make certain any power bar used for this purpose is rated to handle the total maximum wattage of every component in your stereo system.

If an extension cord must be used to supply power for the M-200t, be sure it can handle a minimum of 500W. Use a heavy-duty cord (16-gauge or heavier) for safety, and to minimize line losses.

Never switch the M-200t on or off with loud music playing through your stereo system. Make sure the volume control on the preamp is turned down or off before switching on the power of any component in your stereo system.

Features and Functions

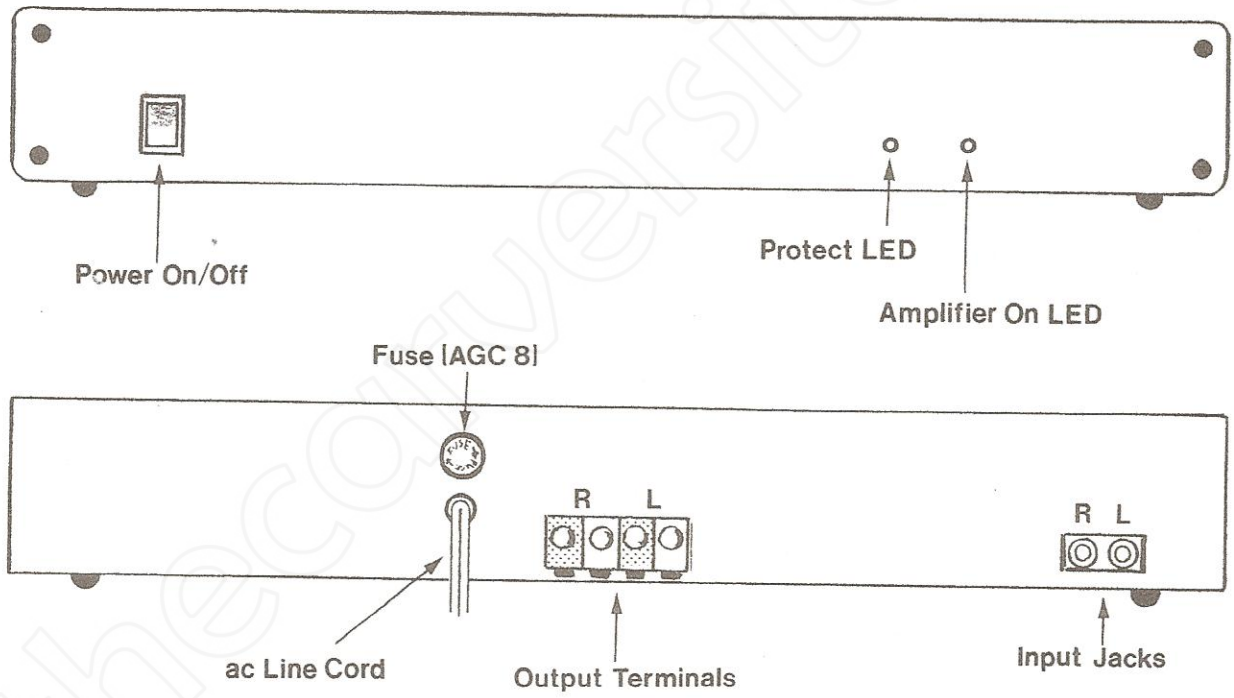

Power ON/OFF

This switch turns the M-200t on or off. Remember, don't make any connections to or from the M-200t with the power on. Another suggestion is to inspect all the connections you've made installing the M-200t before switching on the power of any component in the stereo system. It's better to be safe than sorry later.

LED Display

The M-200t's LED display is located on the lower right-hand side of its front panel. The outer LED (AMPLIFIER ON) will light up when power is on. This LED will remain lit as long as ac power is supplied to the amplifier. The other LED (PROTECT) serves as an indication of fault. The PROTECT LED will illuminate to indicate possible short circuits in a loudspeaker connection or severe overloading. This indication will last from one second to as long as one minute, depending on the nature of the fault. When proper operation is restored, the PROTECT LED will revert to its normal "off" status.

theconversite.com

The M-200t uses analog-comparator circuits to constantly monitor certain conditions in the amplifier that might result in damage to your loudspeakers. For example, if the circuitry recognizes conditions that could cause thermal failure of a loudspeaker element's voice coil, the M-200t power supply will shut down temporarily. If the circuits sense excessive clipping that can damage fragile high-frequency drivers in the loudspeakers, the amplifier will likewise shut down. The PROTECT LED will illuminate as a warning. If you persist in operation with continued amplifier clipping, the circuits will shut it down for a longer period of time. Beyond this, the circuitry will "recognize" operator carelessness and shut the M-200t off for a second to one minute as a reprimand and reminder of the cost of high-frequency driver replacement. These same circuits will protect loudspeakers from low-frequency transients without interfering with low-frequency musical passages. Even a 20 msec, 200W pulse cannot confuse the circuits, and there's no "current limiting" sonic distortion.

However, we should remind you that even though the M-200t's protection circuits can eliminate or greatly reduce the possibility of loudspeaker damage from certain fault conditions, they will not protect loudspeakers from damage caused by abuse or misuse. In short, if your loudspeakers are designed to handle 80W of continuous power, they probaby won't survive the full output of the M-200t for very long.

The M-200t's protection circuitry can't help you here. Be sure your loudspeakers can handle the full output of the M-200t on a continuous basis, or operate them within the guidelines issued by the loudspeaker manufacturer. If the latter, keep the preamp's volume control *down*. We also recommend fusing the loudspeakers per instructions issued by the manufacturer.

Fuse

The main fuse, located in its holder on the rear panel of the M-200t, has been selected to protect the amplifier without sacrificing its ability to recreate dynamic range. If the fuse blows, investigate possible causes and correct any fault before replacing it. Be sure the amplifier's power is switched off and unplug the line cord, then replace the fuse with the same value *only* (AGC 8). The use of a larger fuse can result in serious amplifier damage and will void the warranty. Repeatedly blowing fuses could indicate a serious problem. If this occurs, remove the amplifier from service and have it checked out by an Authorized Carver Service Center or a qualified technician.

Connections and Operation

After the M-200t is physically located in your stereo system, the next step is to make the connections between the preamp and the amplifier's inputs. The diagram below details these connections.

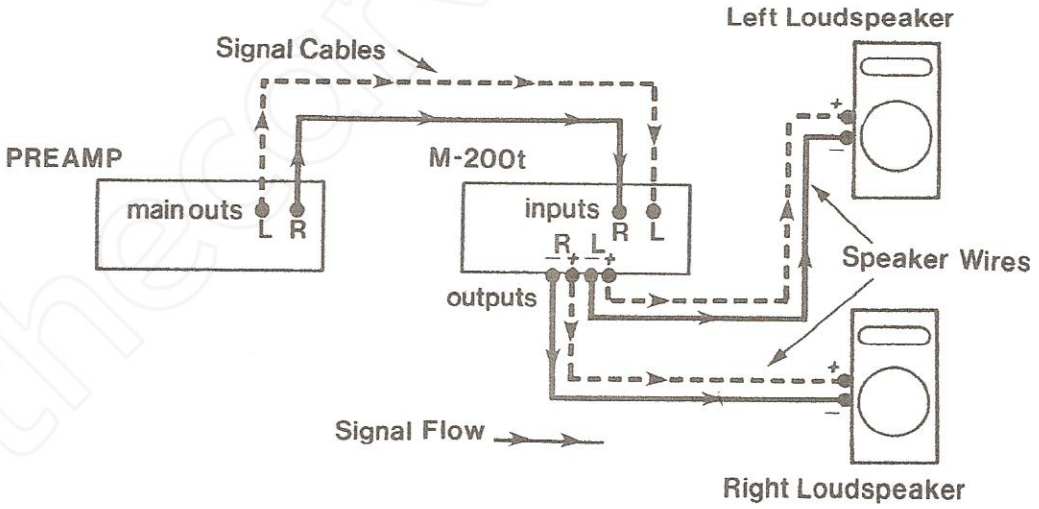

For normal stereo operation, the left main output of the preamp is connected to the M-200t's left channel input and the right main output to the right channel input. If you're using external signal processing equipment, like an equalizer or Carver's C-9 Sonic Hologram Generator™, input signals to

the M-200t are supplied from the outputs of these devices. The connections are made the same way as those between a preamp and the M-200t. The diagram shows connections made in a system using a preamp, Carver C-9, and a M-200t.

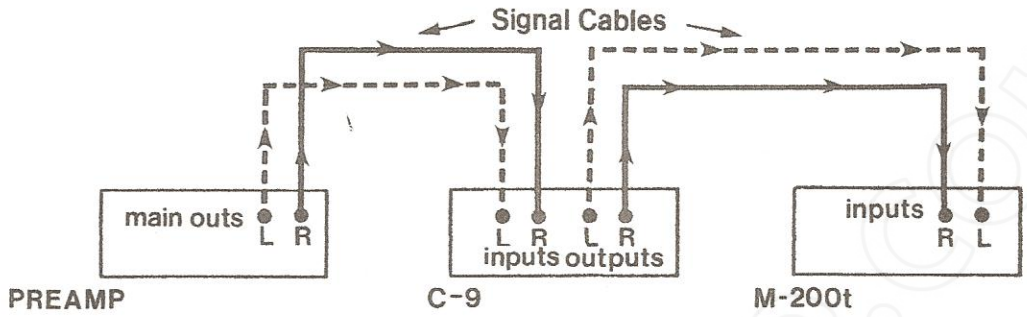

Simply take the left channel output of the C-9 and connect it to the left channel input of the M-200t. Repeat the process for the right channel.

Cables and Cords

Use quality, shielded cables that aren't over 20 feet in length. This will minimize possible noise interference that might degrade signal quality before it even gets to the inputs of the M-200t.

If you already have interconnect cables, inspect them for broken insulation and crushed leads or connectors. If you have any question about the condition of a cable, the best policy is to replace it.

Loudspeaker Connections

As important as using good cables to supply input signals to your amplifier, it's equally important to use quality speaker wire to connect the outputs to the loudspeakers. There are different types of speaker wire, but a common choice is "zip" or lamp cord. Other than being inexpensive and available at any hardware store, lamp cord has a small ridge or marking on the insulation jacket of one conductor for identification purposes. Some cords use silver- and copper-colored wires to note the difference between conductors. Coding is an aid in properly phasing the loudspeakers.

While speaker wire as light as 22-gauge can be used with a M-200t, 18-gauge is recommended for most applications. For runs of speaker wire over 15 feet, use an even heavier speaker wire to minimize power loss and reduce the damping factor.

Your stereo dealer can also help select a good speaker wire for your system. There are many special speaker wires that offer improved performance when it come to line losses and capacitance. Many of these same premade cables have connectors that will further simplify any connections between the M-200t and loudspeakers.

Making the Connections

If you're using lamp cord to connect the loudspeakers, just strip ¼-inch of insulation off the ends of each conductor and twist the strands tightly before inserting them in the proper terminals. Make all connections firmly; to secure and lock speaker wires in place, gently push downward on the terminal's release tab after the wires are inserted. Refer to the diagram screened on the M-200t's rear panel or the diagram below for proper connection of loudspeakers.

DON'T CONNECT ANY SPEAKER TERMINAL FROM THE M-200t TO EACH OTHER — EITHER AT THE AMPLIFIER OR LOUDSPEAKERS. Make certain no stray strands of exposed wire are touching between terminals.

The M-200t can operate into any loudspeaker impedence from 4Ω on up. If you're not sure about a loudspeaker's nominal impedence, consult its owner's manual or your stereo dealer.

Another important consideration is the loudspeaker's ability to handle the powerful output of a M-200t. Few loudspeakers can take the M-200t's sustained full-power for more than a brief period of time, such as a musical crescendo.

Yet, your amplifier's unclipped, undistorted output is much less hazardous for loudspeakers than the waveform of a smaller amplifier driven into hard clipping. Separate fusing per the loudspeaker manufacturer's instruction is strongly recommended. Naturally, Carver Corporation cannot be responsible for damage to loudspeakers connected to this amplifier.

Phasing

Correct phasing is necessary for the left and right loudspeakers to work in unison rather than oppose each other. Each loudspeaker has + and − connections. These connections are normally indicated by a red terminal or "8" for + and a black terminal "0" or "Common" for −. Each should be connected the same way at the M-200t and loudspeakers. This part of the installation is made easier by identifying marks or ridges on one conductor of the speaker wire.

If you're not sure if the loudspeakers are connected in phase, wait till the set-up is completed. At that time, you may play a musical selection rich in bass or low-frequency program material. Using the preamp, switch between stereo and mono modes; when you're standing midway between the speakers you can identify an out-of-phase hook up by a weakening of bass (in the mono mode); if phasing is correct, the bass should remain unchanged. To fix this problem, simply reverse the leads on one speaker.

Mono Connection

The M-200t can be used as an immensely powerful single-channel amplifier without the use of any switch or special adaptor. Refer to the diagram on the M-200t's rear panel.

You'll need to supply both input jacks with identical signals from a "Y" connector. The speaker leads must be connected to the two out terminals *only*. The two inner terminals remain unconnected. The + wire goes to the red terminal (noninverting), the − wire to the black terminal (inverting). The resulting power is 350W rms into 8Ω.

Common-Ground Speaker Switching Systems

NOTE: READ THE FOLLOWING INFORMATION CAREFULLY.

Certain kinds of common-ground systems *may* be used for speaker switching. Certain other kinds of switchers *may not* be used.

The multiple switching systems often used by stereo dealers in their showrooms *may not* be used because one of two unacceptable conditions would result: One channel shorted to ground, or one channel out-of-phase with respect to the other. The former occurs because conventional amplifiers are included in the switching system.

A common-ground switching system properly installed in your home *may* be used. You'll have to connect the common-ground wire to the back terminal marked "chassis" on the M-200t's rear panel. The two outside terminals (one black, one red) become the "hot" signal leads and may be routed through any switching system of your choice. The red terminal marked "chassis" remains unused. At this point, there's no conflict in terms of ground or signal leads. However, in order to preserve proper phasing, the wires that connect to each *right* channel loudspeaker in your system must be reversed 180° (or + to− interchanged).

Specifications

Power Output:	120W rms per channel into 8Ω from 20 Hz to 20 kHz with no more than 0.15% total harmonic distortion.
Power at Clipping:	130W rms per channel into 8Ω at 1 kHz. 200W rms per channel into 4Ω at 1 kHz. 350W mono bridged into 8Ω at 1 kHz.
Noise:	Greater than 100 dB down, IHF A weighted. Harmonically related commutation noise is equal to or less than nonlinear distortion component, IHF A weighted.
Intermodulation Distortion:	0.15% SMPTE (Maximum)
Transient Intermodulation Distortion:	Less than .001%.
Frequency Bandwidth:	−3 to +0 dB from 1 Hz to 80 kHz at 1W.
Power Requirements:	120V, 60 Hz; 240V, 50 Hz (optional).
Power Consumption:	500W.
Dimensions:	2.55″/17.32″/9.20″ (h/w/d).
Weight:	10.25 lbs.
Optional Accessory:	Appearance Panel (Carver PN# C-HE/M-200).

Troubleshooting

If you're having trouble or suspect a problem, try some simple troubleshooting first. More likely than not, the problem lies elsewhere in the system — not with the M-200t.

Replace any suspect cable or inspect all the connections between the preamp, any signal processing equipment, and M-200t. Inspect the speaker wires and terminals on the amplifier and loudspeakers for disconnects or possible shorts, etc.

If the problem still exists, contact:

CARVER CORPORATION CUSTOMER SERVICE
P.O. Box 664
Woodinville, WA 98072
or call: (206) 483-1202

Your inquiry will be promptly responded to; we're glad to help. You might be directed to a Carver Authorized Service Center, or be asked to return the unit to the factory. We must have the serial number of your M-200t before its return can be authorized. When shipped to a service center or the factory, make sure it's in the original carton, well sealed. If convenient, your Carver dealer should be consulted and might be able to offer additional assistance.

Carver Corporation Limited Warranty

NOTICE: The following warranty information is exclusive to the United States only. Please see your Carver dealer or distributor for the correct warranty information for your area and locale.

Carver Corporation is proud of its products which have been built with care using advanced technology and premium parts. Your unit has been crafted to perform properly for many years. Carver Corporation offers to you, the owner of a new Carver product, the following warranty:

The Carver Corporation Warranty for each of its products is in effect for three years from the date of original retail purchase. The Carver Corporation Warranty covers defects in materials and workmanship. However, the following are excluded: a) damage caused during shipment, b) damage caused by accident, misuse, abuse or operation contrary to instructions specified in the Carver Corporation owner's manual, c) units where the serial number has been defaced, modified or removed, d) damage resulting from modification or attempted repair by any person other than authorized by Carver Corporation